| DOOR NUMBER | QTY | OPENING | | ACTUAL | | MODEL | JAMB | | | MOUNTING | | LOCK | PANELS WIDE | PANELS HIGH | SECTION NUMBER OPEN FOR GLASS | | | | | | | |
|---|---|---|---|---|---|---|---|---|---|---|---|---|---|---|---|---|---|---|---|---|---|---|
| | | WIDTH | HEIGHT | WIDTH | HEIGHT | | W | S | M | ANGLE | BRKT | | | | 1 | 2 | 3 | 4 | 5 | 6 | 7 | 8 |
| | | | | | | | | | | | | | | | | | | | | | | |
| | | | | | | | | | | | | | | | | | | | | | | |
| | | | | | | | | | | | | | | | | | | | | | | |

JOB:

DISTR:

CONTR:

ARCH:

RAYNOR

NR:2902469

# ALUMAVIEW OPTIMA

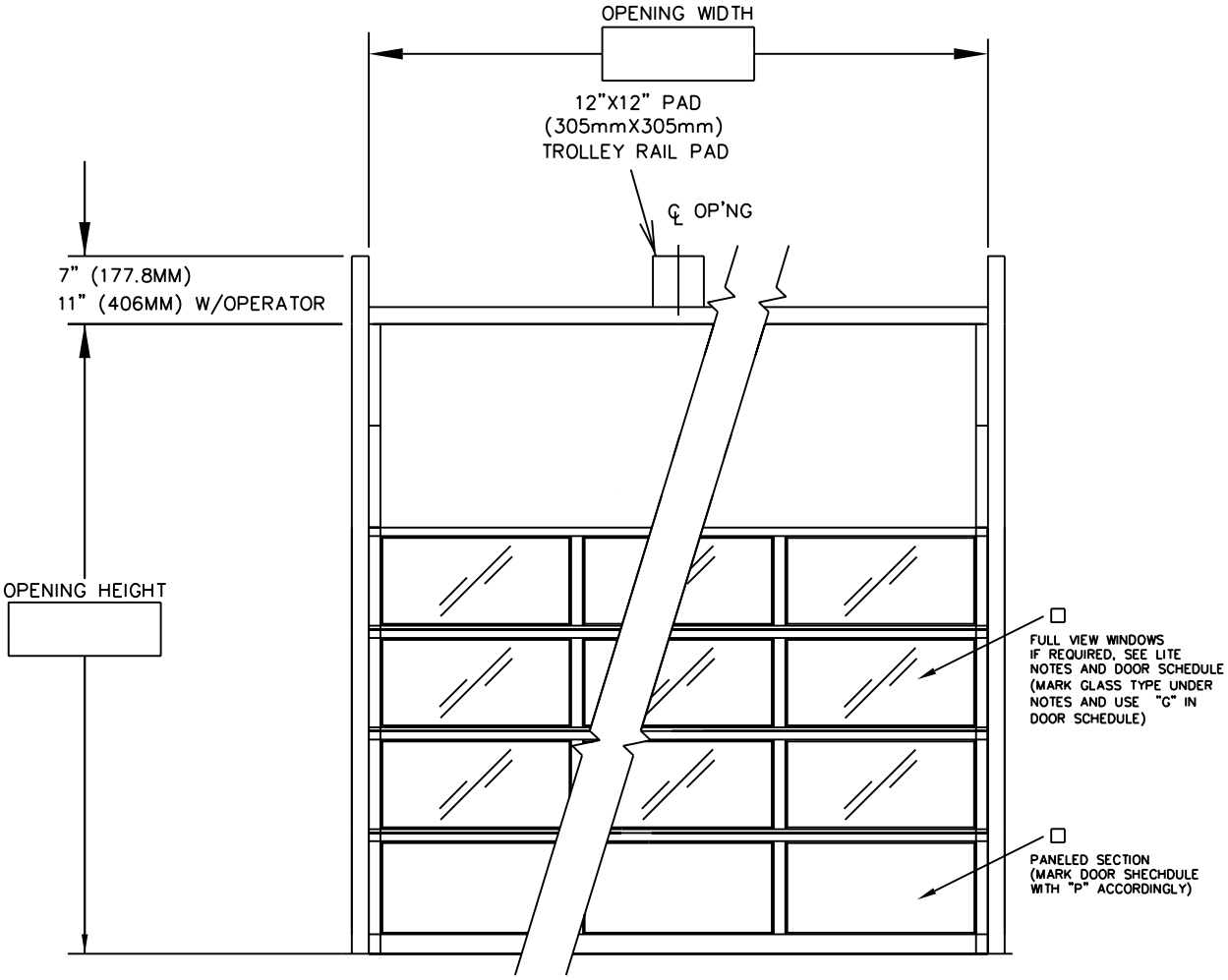


INTERIOR ELEVATION

1) DOORS SHALL BE RAYNOR SECTIONAL OVERHEAD TYPE ALUMAVIEW OPTIMA 'HL' AS MANUFACTURED BY RAYNOR GARAGE DOOR CO.. SECTIONS SHALL BE 2" (50.8MM) THICK 6063T6 ALUMINUM ALLOY FRAME WITH .050" (1.3mm )THICK ALUMINUM PANELS. STILES AND RAILS TO BE JOINED TOGETHER WITH 5/16" (7.9MM) GALVANIZED THROUGH BOLTS. PANELS AND GLASS TO BE COMPLETELY ENCASED IN SOFT VINYL CHANNELS AND HELD IN PLACE WITH A SNAP-IN EXTRUDED ALUMINUM RETAINER. BOTTOM RAIL TO BE 5-1/8" (130.2mm). TOP RAILS TO BE 3-1/4" (82.5mm). THE COMBINED DIMENSION OF THE TWO MEETING INTERMEDIATE RAILS TO BE 3-3/4" (95.2mm). ENDSTILES SHALL BE 3-1/4" (82.5mm), OR 6-1/4" (158.7mm) WIDE, DEPENDING ON SIZE. CENTER STILES TO BE 3-5/8" (92.1mm) WIDE. BOTTOM RAIL OF DOOR TO HAVE VINYL WEATHERSTRIP TO SEAL DOOR TO FLOOR. EXTRUSIONS AND PANELS TO BE ETCHED AND CLEAR ANODIZED TO MEET SPEC. 204R1. DOORS WITH FULL GLASS, UP TO 20' 2" (6147mm) WIDE, IN PAINTED BROWN OR WHITE. SPECIAL ANODIZED FINISHES OR ARMORBRITE COLORS AVAILABLE.

- ☐ GLASS (CLEAR)_____ (DSB 3/16"(4.8MM) OR DSB 1/4" (6.4MM))
- ☐ GLASS (WIRE)_____ (DSB 3/16"(4.8MM) OR DSB 1/4" (6.4MM))
- ☐ GLASS (TEMPERED)_____ (1/8"(3.2MM), 3/16"(4.8MM) OR 1/4" (6.4MM))
- ☐ PLEXIGLASS_____ (1/8"(3.2MM) OR1/4" (6.4MM))
- ☐ LEXAN_____ (1/8"(3.2MM) OR1/4" (6.4MM))
- ☐ LOCKING - CREMONE TYPE BOLT ENGAGES SLOT IN TRACK, _____ HAND SIDE. FIVE PIN TUMBLER CYLINDER OUTSIDE - NIGHT LATCH INSIDE.
- ☐ LOCKING - SPRING LOADED SLIDE BOLT ENGAGES SLOT IN TRACK. OPERABLE FROM INSIDE ONLY - MAY BE MOUNTED EITHER SIDE
- ☐ LOCKING - OMIT LOCK.

LOCKS SHOULD NOT BE SUPPLIED WITH AN ELECTRIC OPERATED DOOR WITHOUT A LOCK INTERLOCK SWITCH.

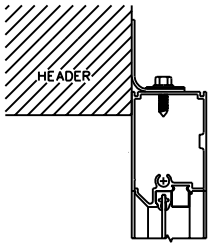


HEADER SEAL

☐

| DOOR NUMBER | QTY | OPENING | | ACTUAL | | MODEL | JAMB | | | MOUNTING | | LOCK | PANELS WIDE | PANELS HIGH | SECTION NUMBER OPEN FOR GLASS | | | | | | | |
|---|---|---|---|---|---|---|---|---|---|---|---|---|---|---|---|---|---|---|---|---|---|---|
| | | WIDTH | HEIGHT | WIDTH | HEIGHT | | W | S | M | ANGLE | BRKT | | | | 1 | 2 | 3 | 4 | 5 | 6 | 7 | 8 |
| | | | | | | | | | | | | | | | | | | | | | | |
| | | | | | | | | | | | | | | | | | | | | | | |
| | | | | | | | | | | | | | | | | | | | | | | |

JOB:

DISTR:

CONTR:

ARCH:

RAYNOR

NR: 2902469

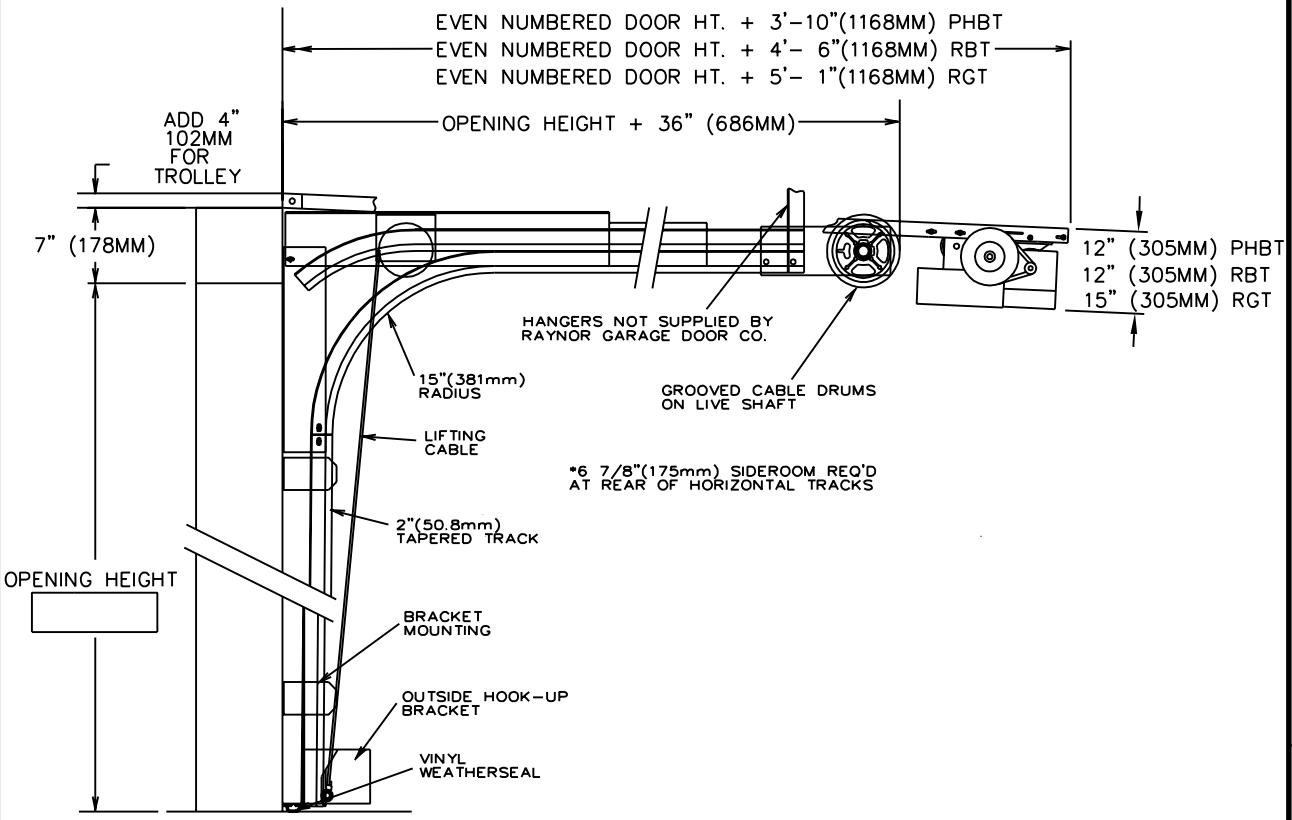


SECTION THRU OPENING

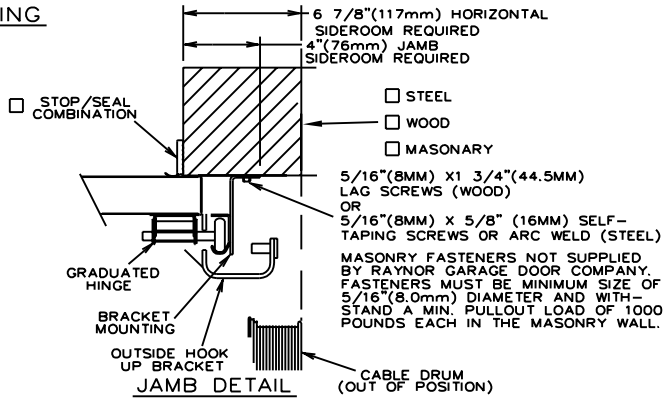


JAMB DETAIL

TRACKS- 2" (50.8mm) HOT-DIPPED GALVANIZED TRACK, PER ASTM A-653, TO BE BRACKET MOUNTED AND FULLY ADJUSTABLE FOR SEALING DOOR TO JAMB. HORIZONTAL TRACK TO BE ADEQUETLY REINFORCED WITH CONTINUOUS ANGLE.

HARDWARE- HINGES AND BRACKETS MADE FROM GALVANIZED STEEL. TRACK ROLLERS SHALL HAVE TEN 1/4" (6.4mm) DIAMETER HARDENED STEEL BALLS PER ROLLER.

SPRING COUNTERBALANCE- HEAVY DUTY OIL-TEMPERED WIRE TORSION SPRINGS ON A CONTINUOUS BALL BEARING CROSS-HEADER SHAFT. GALVANIZED AIRCRAFT TYPE LIFTING CABLES WITH MIN. SAFETY FACTOR OF 5 TO 1.

ANSI/UL325 REQUIRES THE MOTOR OPERATOR BE MOUNTED A MINIMUM OF 8' ABOVE THE FLOOR OR GUARDING OF THE MOTOR OPERATOR TO PREVENT INJURY.(GUARDS BY OTHERS).

- ☐ RAYNOR POWERHOIST BASIC (PHBT) 1/2 H.P., 115 VOLT, SINGLE PHASE
- ☐ RAYNOR POWERHOIST STANDARD (RBT) ___ H.P., ___ VOLT, ____ PHASE
- ☐ RAYNOR POWERHOIST OPTIMA (RGT) ___ H.P., ___ VOLT, ____ PHASE
- ☐ WIRING TYPE-SR2 WIRING, MOMENTARY CONTACT OPEN/CLOSE/STOP. SAFETY EDGE TO REVERSE.
- ☐ WIRING TYPE-SPECIAL (NOT AVAILABLE WITH PHBT OPERATORS) SPECIFY SPECIAL WIRING TYPE _____
- ☐ PNEUMATIC SAFETY EDGE TO REVERSE
- ☐ ELECTRIC SAFETY EDGE TO REVERSE
- ☐ THRU-BEAM PHOTO EYES

☐ COIL CORD OR ☐ CABLE TAKE UP REEL