DOOR NUMBER	QTY	OPENING		ACTUAL		MODEL	JAMB			MOUNTING		LOCK	PANELS WIDE	PANELS HIGH	SECTION NUMBER OPEN FOR GLASS							
		WIDTH	HEIGHT	WIDTH	HEIGHT		W	S	M	ANGLE	BRKT				1	2	3	4	5	6	7	8

JOB:

DISTR:

CONTR:

ARCH:

RAYNOR

NR: 2904076

THERMASEAL STANDARD

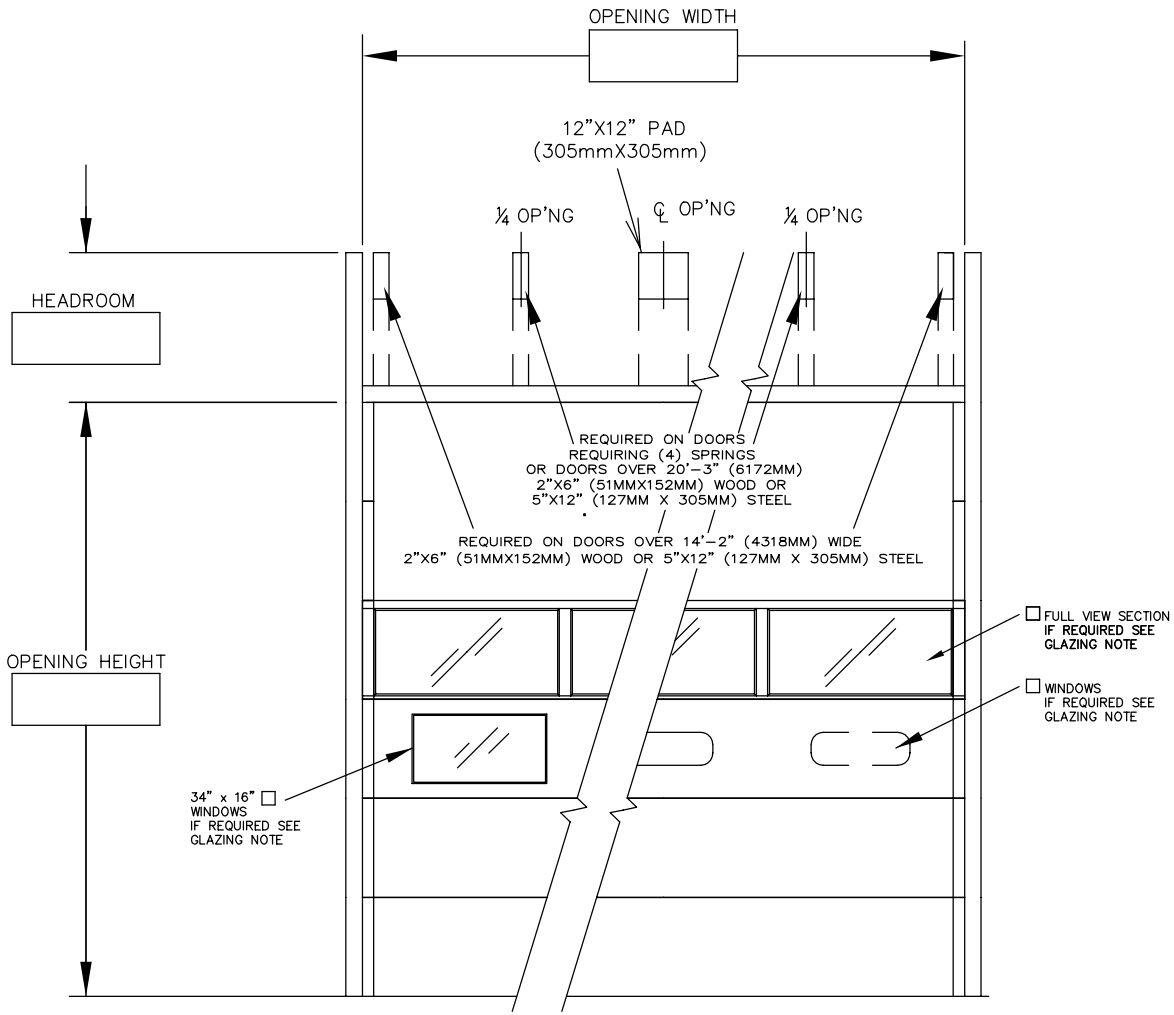

INTERIOR ELEVATION

1) DOORS SHALL BE THERMASEAL SECTIONAL OVERHEAD TYPE RAYNOR SERIES STANDARD, AS MANUFACTURED BY RAYNOR GARAGE DOOR CO.. SECTIONS SHALL BE 1 3/4" (44.5mm) THICK, ROLL-FORMED FROM COMMERCIAL QUALITY HOT DIPPED GALVANIZED STEEL PER ASTM-924 AND A-653. DOOR SECTIONS CONSTRUCTED OF 25 GAUGE EXTERIOR, AND 26 GAUGE INTERIOR STUCCO-EMBOSSED, PENCIL GROOVED SKINS THERMAL BONDED TO A POLYURETHANE BY A CONTINUOUS HOT MELT BEAD TO FORM AN EFFECTIVE THERMAL CORE. EXTERIOR AND INTERIOR SKINS TO BE SEPERATED BREAK. JOINT SEALS ARE USED TO COMPLETE A WEATHER-TITE SEAL ALONG THE ENTIRE SECTION JOINTS. END STILES TO BE 16 GAUGE. SECTIONS TO HAVE CONTINUOUS 20 GA. HARDWARE STIPS. WHEN TESTED IN ACCORDANCE WITH ASTM C-518, THERMASEAL HAS THE FOLLOWING ENERGY VALUES: R-VALUE= 16.4 AND U-VALUE= .061
FINISH- EXTERIOR/INTERIOR OF DOOR SKINS PRE-COATED PRIOR TO ROLLFORMING WITH A TWO COAT PROCESS OF BAKED ON POLYESTER FINISH OVER EPOXY PRIMER._____(WHITE OR DARK KYNAR BROWN) EXTERIOR AND WHITE INTERIOR.

☐ FULLVIEW SECTIONS- SECTIONS SHALL BE MADE FROM 6063T6 EXTRUDED ALUMINUM STILE AND RAIL CONSTRUCTION. GLASS ENCASED AND HELD IN PLACE WITH SELF-ALIGNING RIGID VINYL GLAZING RETAINER.
FINISH-TO MACTH DOOR SECTIONS.
GLAZING TO BE ___1/2" DSB INSULATED OR ___1/8" DSB GLASS.

☐ GLAZING (AS SHOWN)- 24" (610MM)X8"(203MM)X ____ (1/8", 3/16", 1/4",5/8") RUBBER BY RAYNOR

☐ GLAZING (AS SHOWN)- 34" (863.6MM)X16"(406.4MM)X 1" INSULATED DSB GLASS

☐ LOCKING - CREMONE TYPE BOLT ENGAGES SLOT IN TRACK, _____ HAND SIDE. FIVE PIN TUMBLER CYLINDER OUTSIDE - NIGHT LATCH INSIDE.

☐ LOCKING - SPRING LOADED SLIDE BOLT ENGAGES SLOT IN TRACK. OPERABLE FROM INSIDE ONLY - MAY BE MOUNTED EITHER SIDE

☐ LOCKING - OMIT LOCK.

LOCKS SHOULD NOT BE SUPPLIED WITH AN ELECTRIC OPERATED DOOR WITHOUT A LOCK INTERLOCK SWITCH.

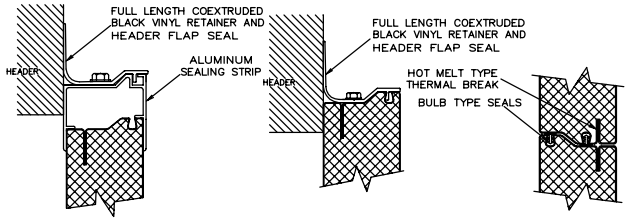

HEADER SEAL w/ SEALING STRIP ☐

HEADER SEAL ☐

JOINT SEAL ☐

DOOR NUMBER	QTY	OPENING		ACTUAL		MODEL	JAMB			MOUNTING		LOCK	PANELS WIDE	PANELS HIGH	SECTION NUMBER OPEN FOR GLASS							
		WIDTH	HEIGHT	WIDTH	HEIGHT		W	S	M	ANGLE	BRKT				1	2	3	4	5	6	7	8

JOB:

DISTR:

CONTR:

ARCH:

RAYNOR

NR: 2904076

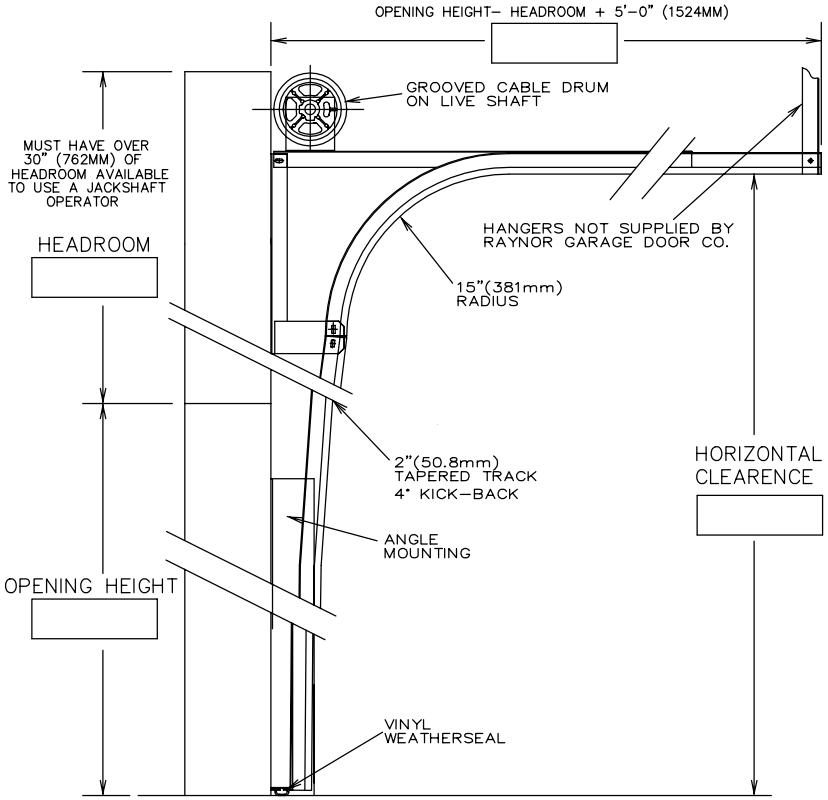

SECTION THRU OPENING

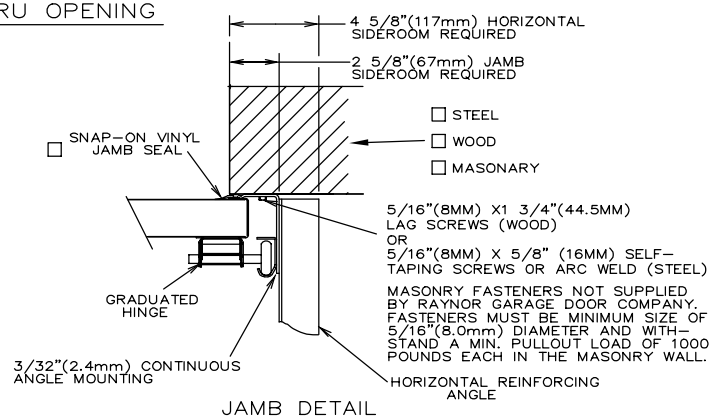

JAMB DETAIL

TRACKS– 2" (50.8mm) HOT–DIPPED GALVANIZED TRACK, PER ASTM A–653, TO BE ANGLE MOUNTED AND FULLY ADJUSTABLE FOR SEALING DOOR TO JAMB. HORIZONTAL TRACK TO BE ADEQUETLY REINFORCED WITH CONTINUOUS ANGLE.

HARDWARE– HINGES AND BRACKETS MADE FROM GALVANIZED STEEL. TRACK ROLLERS SHALL HAVE TEN 1/4" (6.4mm) DIAMETER HARDENED STEEL BALLS PER ROLLER.

SPRING COUNTERBALANCE– HEAVY DUTY OIL–TEMPERED WIRE TORSION SPRINGS ON A CONTINUOUS BALL BEARING CROSS–HEADER SHAFT. GALVA–NIZED AIRCRAFT TYPE LIFTING CABLES WITH MIN. SAFETY FACTOR OF 5 TO 1.

ANSI/UL325 REQUIRES THE MOTOR OPERATOR BE MOUNTED A MINIMUM OF 8' ABOVE THE FLOOR OR GUARDING OF THE MOTOR OPERATOR TO PREVENT INJURY.(GUARDS BY OTHERS).

- ☐ RAYNOR POWERHOIST BASIC (PHBJR) 1/2 H.P., 115 VOLT, SINGLE PHASE
- ☐ RAYNOR POWERHOIST BASIC (PHBHR) 1/2 H.P., 115 VOLT, SINGLE PHASE
- ☐ RAYNOR POWERHOIST BASIC (PHBJ) 1/2 H.P., 115 VOLT, SINGLE PHASE
- ☐ RAYNOR POWERHOIST BASIC (PHBJH) 1/2 H.P., 115 VOLT, SINGLE PHASE
- ☐ RAYNOR POWERHOIST STANDARD (RBJ) ___ H.P., ___ VOLT, ____ PHASE
- ☐ RAYNOR POWERHOIST STANDARD (RBJH) ___ H.P., ___ VOLT, ____ PHASE
- ☐ RAYNOR POWERHOIST OPTIMA (RGJH) ___ H.P., ___ VOLT, ____ PHASE
- ☐ WIRING TYPE–SR2 WIRING, MOMENTARY CONTACT OPEN/CLOSE/STOP. SAFETY EDGE TO REVERSE.
- ☐ WIRING TYPE–SPECIAL (NOT AVAILABLE WITH PHBT OPERATORS) SPECIFY SPECIAL WIRING TYPE _____
- ☐ PNEUMATIC SAFETY EDGE TO REVERSE
- ☐ ELECTRIC SAFETY EDGE TO REVERSE
- ☐ THRU–BEAM PHOTO EYES
- ☐ COIL CORD OR ☐ CABLE TAKE UP REEL

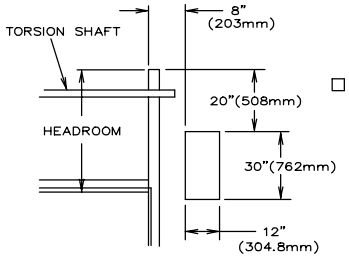

JACKSHAFT MOUNTING DETAIL

POSITION # _____ REQUIRED

(TYPICAL DIMENSIONS)

RAYNOR DOES NOT RECOMMEND THE USE OF A JACKSHAFT OPERATOR ON DOORS WITH LESS THAN OR EQUAL TO 30"(762MM) OF HEADROOM. RAYNOR RECOMMENDS THE USE OF A TROLLEY TYPE OPERATOR IN THESE SITUATIONS.