DOOR NUMBER	QTY	OPENING		ACTUAL		MODEL	JAMB			MOUNTING		LOCK	PANELS WIDE	PANELS HIGH	SECTION NUMBER OPEN FOR GLASS							
		WIDTH	HEIGHT	WIDTH	HEIGHT		W	S	M	ANGLE	BRKT				1	2	3	4	5	6	7	8

JOB:

DISTR:

CONTR:

ARCH:

RAYNOR

NR: 2904089

THERMASEAL BASIC

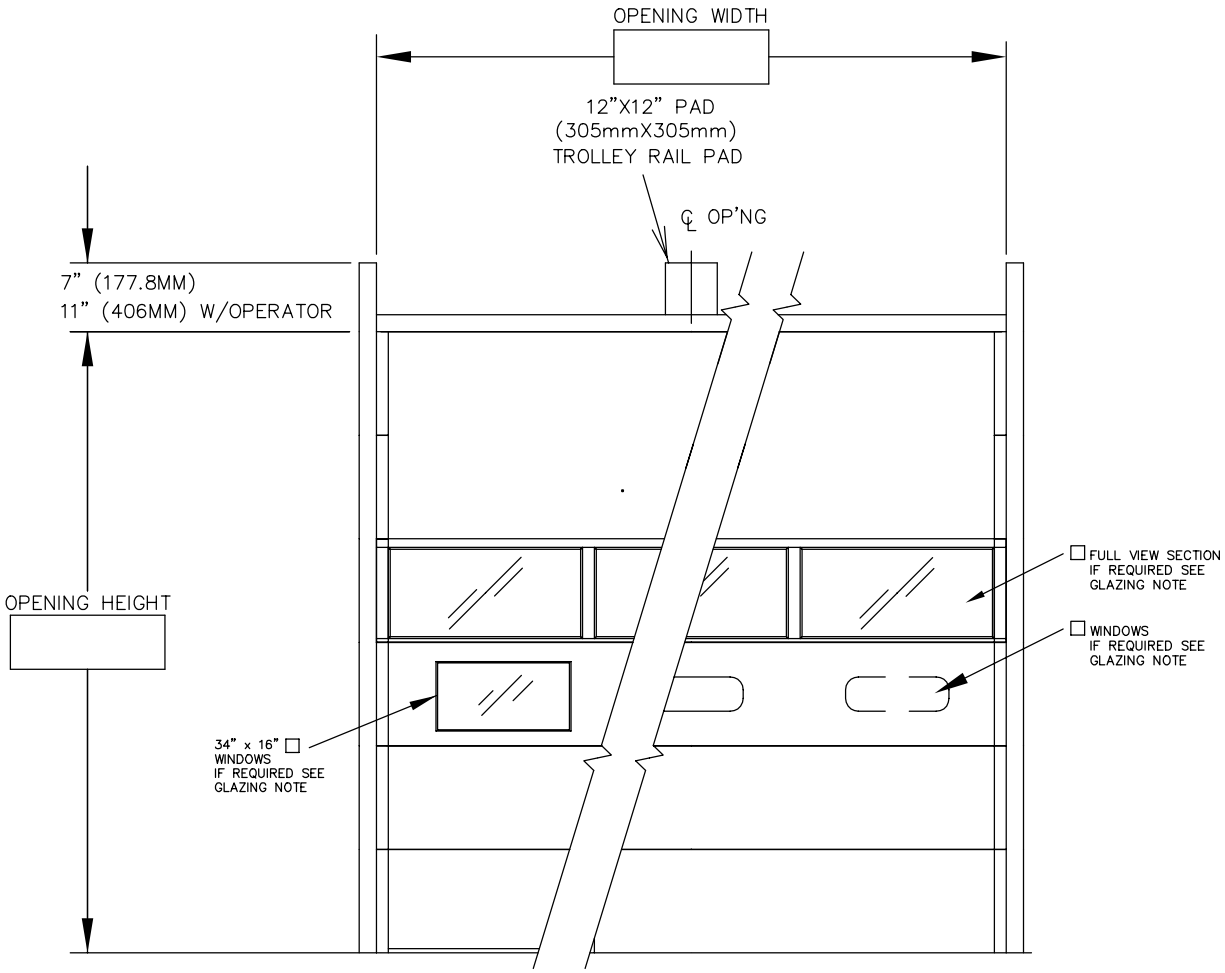

INTERIOR ELEVATION

1) DOORS SHALL BE THERMASEAL SECTIONAL OVERHEAD TYPE RAYNOR SERIES BASIC, AS MANUFACTURED BY RAYNOR GARAGE DOOR CO.. SECTIONS SHALL BE 1 1/2" (38.1mm) THICK, ROLL-FORMED FROM COMMERCIAL QUALITY HOT DIPPED GALVANIZED STEEL PER ASTM-924 AND A-653. DOOR SECTIONS CONSTRUCTED OF 26 GAUGE EXTERIOR, AND 26 GAUGE INTERIOR STUCCO-EMBOSSED, PENCIL GROOVED SKINS THERMAL BONDED TO A POLYURETHANE BY A CONTINUOUS HOT MELT BEAD TO FORM AN EFFECTIVE THERMAL CORE. EXTERIOR AND INTERIOR SKINS TO BE SEPERATED BREAK. JOINT SEALS ARE USED TO COMPLETE A WEATHER-TITE SEAL ALONG THE ENTIRE SECTION JOINTS. END STILES TO BE 16 GAUGE. SECTIONS TO HAVE CONTINUOUS 20 GA. HARDWARE STIPS. WHEN TESTED IN ACCORDANCE WITH ASTM C-518, THERMASEAL HAS THE FOLLOWING ENERGY VALUES: R-VALUE= 14.5 AND U-VALUE= .069
FINISH- EXTERIOR/INTERIOR OF DOOR SKINS PRE-COATED PRIOR TO ROLLFORMING WITH A TWO COAT PROCESS OF BAKED ON POLYESTER FINISH OVER EPOXY PRIMER. WHITE EXTERIOR AND WHITE INTERIOR.

☐ FULLVIEW SECTIONS- SECTIONS SHALL BE MADE FROM 6063T6 EXTRUDED ALUMINUM STILE AND RAIL CONSTRUCTION. GLASS ENCASED AND HELD IN PLACE WITH SELF-ALIGNING RIGID VINYL GLAZING RETAINER.
FINISH-TO MACTH DOOR SECTIONS.
GLAZING TO BE ___1/2" DSB INSULATED OR ___1/8" DSB GLASS.

☐ GLAZING (AS SHOWN)- 24" (610MM)X8"(203MM)X ____ (1/8", 3/16", 1/4",5/8") RUBBER BY RAYNOR

☐ GLAZING (AS SHOWN)- 34" (863.6MM)X16"(406.4MM)X 1" INSULATED DSB GLASS

☐ LOCKING - CREMONE TYPE BOLT ENGAGES SLOT IN TRACK, _____ HAND SIDE. FIVE PIN TUMBLER CYLINDER OUTSIDE - NIGHT LATCH INSIDE.

☐ LOCKING - SPRING LOADED SLIDE BOLT ENGAGES SLOT IN TRACK. OPERABLE FROM INSIDE ONLY - MAY BE MOUNTED EITHER SIDE

☐ LOCKING - OMIT LOCK.

LOCKS SHOULD NOT BE SUPPLIED WITH AN ELECTRIC OPERATED DOOR WITHOUT A LOCK INTERLOCK SWITCH.

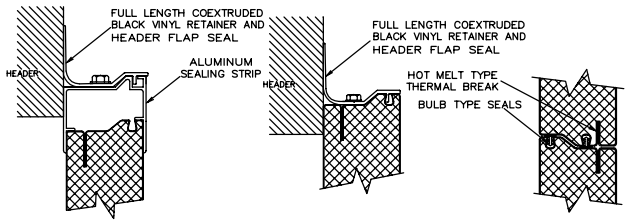

HEADER SEAL w/ SEALING STRIP ☐

HEADER SEAL ☐

JOINT SEAL ☐

DOOR NUMBER	QTY	OPENING		ACTUAL		MODEL	JAMB			MOUNTING		LOCK	PANELS WIDE	PANELS HIGH	SECTION NUMBER OPEN FOR GLASS							
		WIDTH	HEIGHT	WIDTH	HEIGHT		W	S	M	ANGLE	BRKT				1	2	3	4	5	6	7	8

JOB:

DISTR:

CONTR:

ARCH:

RAYNOR

NR: 2904089

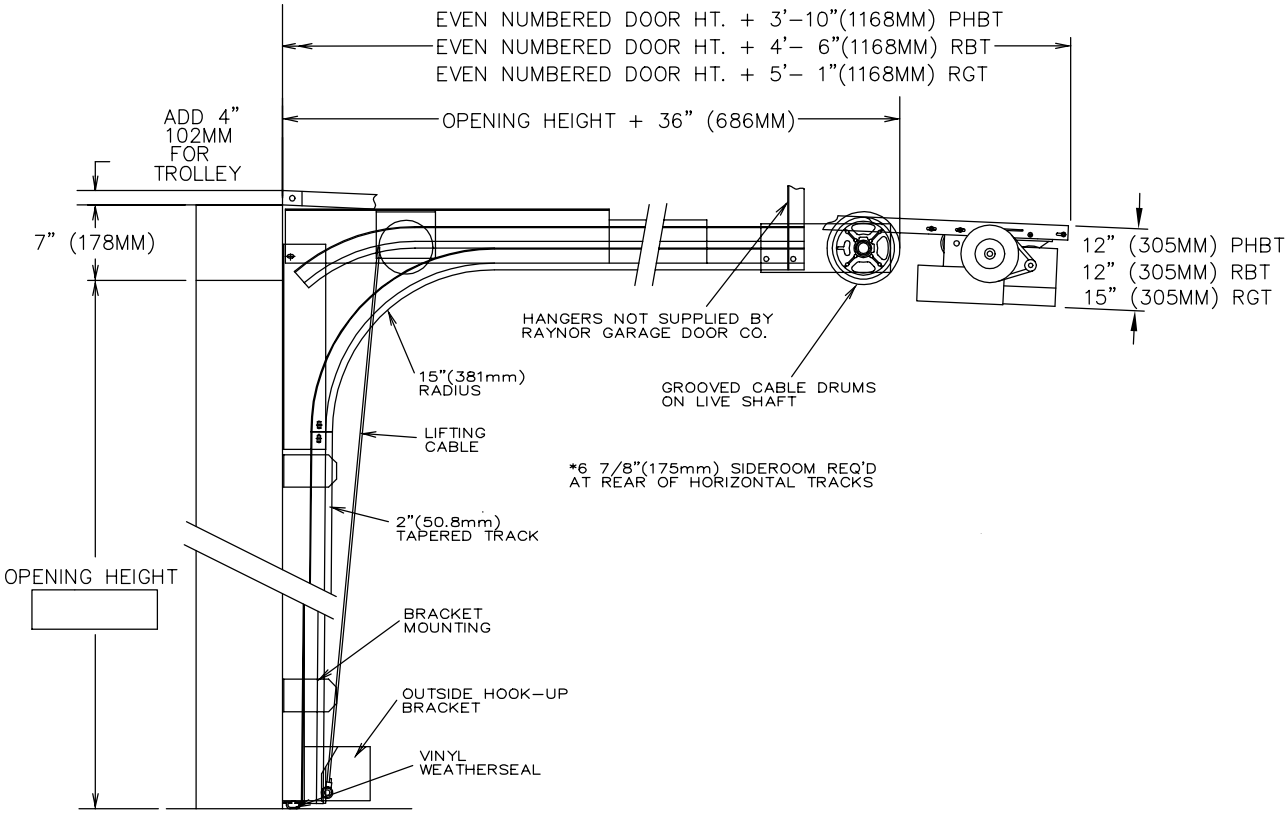

SECTION THRU OPENING

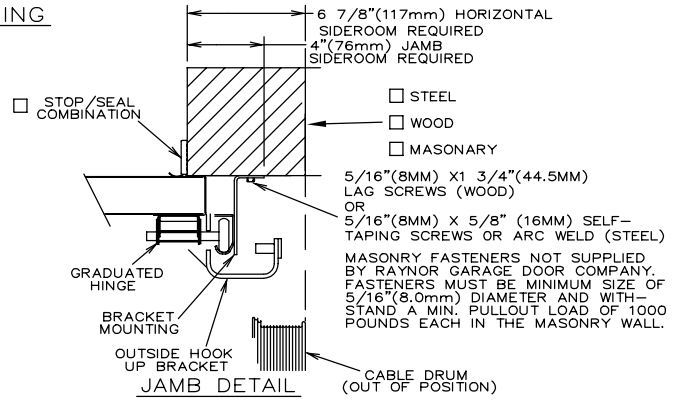

JAMB DETAIL

TRACKS- 2" (50.8mm) HOT-DIPPED GALVANIZED TRACK, PER ASTM A-653, TO BE BRACKET MOUNTED AND FULLY ADJUSTABLE FOR SEALING DOOR TO JAMB. HORIZONTAL TRACK TO BE ADEQUETLY REINFORCED WITH CONTINUOUS ANGLE.

HARDWARE- HINGES AND BRACKETS MADE FROM GALVANIZED STEEL. TRACK ROLLERS SHALL HAVE TEN 1/4" (6.4mm) DIAMETER HARDENED STEEL BALLS PER ROLLER.

SPRING COUNTERBALANCE- HEAVY DUTY OIL-TEMPERED WIRE TORSION SPRINGS ON A CONTINUOUS BALL BEARING CROSS-HEADER SHAFT. GALVANIZED AIRCRAFT TYPE LIFTING CABLES WITH MIN. SAFETY FACTOR OF 5 TO 1.

ANSI/UL325 REQUIRES THE MOTOR OPERATOR BE MOUNTED A MINIMUM OF 8' ABOVE THE FLOOR OR GUARDING OF THE MOTOR OPERATOR TO PREVENT INJURY.(GUARDS BY OTHERS).

- ☐ RAYNOR POWERHOIST BASIC (PHBT) 1/2 H.P., 115 VOLT, SINGLE PHASE
- ☐ RAYNOR POWERHOIST STANDARD (RBT) ___ H.P., ___ VOLT, ____ PHASE
- ☐ RAYNOR POWERHOIST OPTIMA (RGT) ___ H.P., ___ VOLT, ____ PHASE
- ☐ WIRING TYPE-SR2 WIRING, MOMENTARY CONTACT OPEN/CLOSE/STOP. SAFETY EDGE TO REVERSE.
- ☐ WIRING TYPE-SPECIAL (NOT AVAILABLE WITH PHBT OPERATORS) SPECIFY SPECIAL WIRING TYPE _____
- ☐ PNEUMATIC SAFETY EDGE TO REVERSE
- ☐ ELECTRIC SAFETY EDGE TO REVERSE
- ☐ THRU-BEAM PHOTO EYES

☐ COIL CORD OR ☐ CABLE TAKE UP REEL