DOOR NUMBER	QTY	OPENING		ACTUAL		MODEL	JAMB			MOUNTING		LOCK	PANELS WIDE	PANELS HIGH	SECTION NUMBER OPEN FOR GLASS							
		WIDTH	HEIGHT	WIDTH	HEIGHT		W	S	M	ANGLE	BRKT				1	2	3	4	5	6	7	8

JOB:

DISTR:

CONTR:

ARCH:

RAYNOR

NR:2902505

STYLEFORM OPTIMA

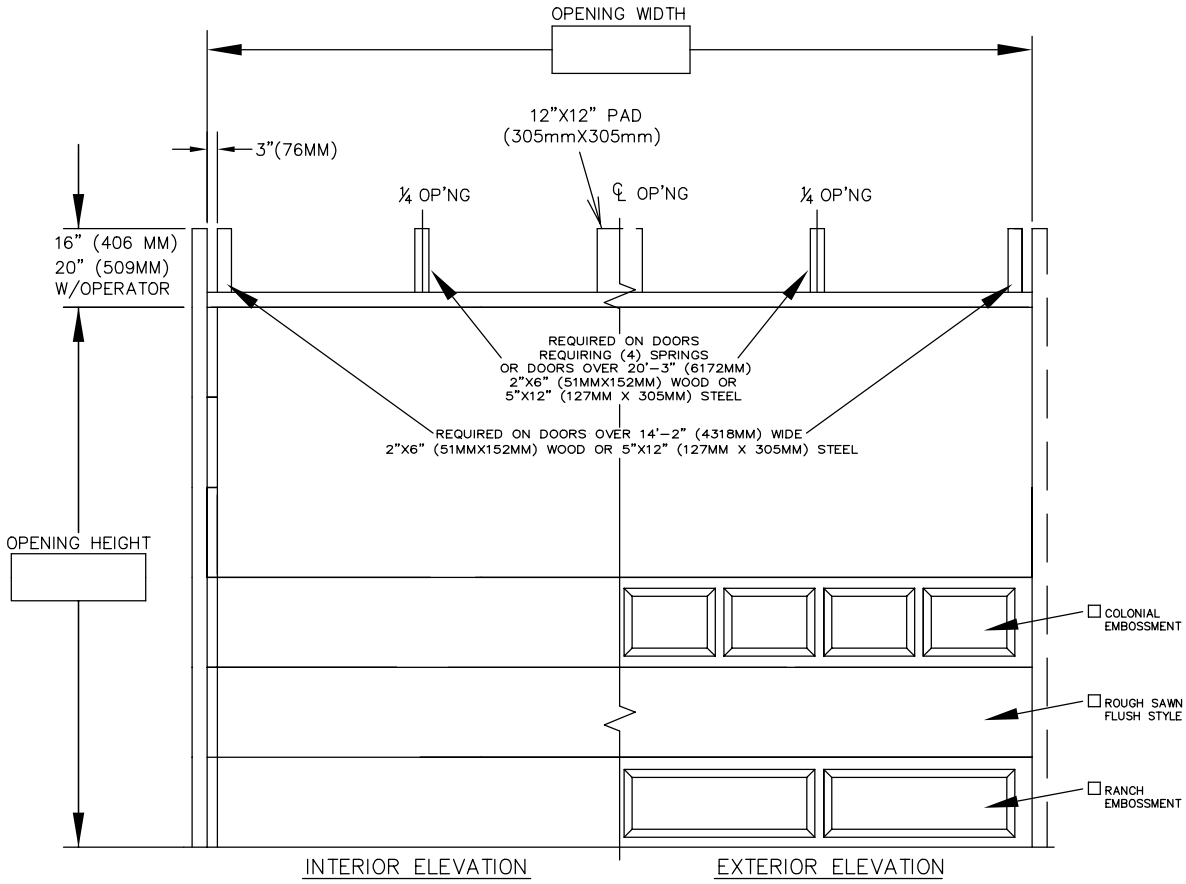

1) DOORS SHALL BE STYEFORM OPTIMA SECTIONAL OVERHEAD TYPE DOOR AS PROVIDED BY RAYNOR GARAGE DOORS. SECTIONS SHALL BE 2" THICK,ROLL FORMED COMMERCIAL QUALITY, HOT DIPPED GALVANIZED. .0225" THICK STEEL PER ASTM A-924 AND A-653. SECTIONS MAY BE MADE FLUSH OR WITH EMBOSSED RAISED PANELS,BOTH THE INTERIOR AND THE EXTERIOR SKINS HAVE A ROUGH-SAWN WOODGRAIN TEXTURE. SECTIONS ARE MANUFACTURED WITH A TONGUE AND GROOVE JOINT FOR A WEATHERTIGHT CLOSURE BETWEEN SECTIONS. END STILES TO BE 18 GA.(.043" MIN.)

POLYSTYRENE INSULATING CORE - EACH SECTION IS FORMED FROM A 1 7/8" THICK POLYSTYRENE INSULATING CORE, COMPLETELY BONDED BETWEEN TWO STEEL SKINS, AND MECHANICALLY INTERLOCKED ALONG THEIR ENTIRE LENGTH. DOOR HAS A CALCULATED R-VALUE OF 10.25. DOOR HAS A CALCULATED U-VALUE OF .097.

SECTION FINISH - THE OUTSIDE OF THE DOOR IS FINISH PAINTED WITH A (WHITE, ALMOND, BROWN, BRONZE-TONE, OR CLAY-TONE) BAKED ON POLYESTER FINISH. THE INSIDE OF THE DOOR IS FINISHED WITH A WHITE BAKED ON POLYESTER FINISH. DOORS MAY BE FIELD PAINTED WITH A SEMI GLOSS EXTERIOR LATEX PAINT.

☐ LOCKING - CREMONE TYPE BOLT ENGAGES SLOT IN TRACK, _____ HAND SIDE. FIVE PIN TUMBLER CYLINDER OUTSIDE - NIGHT LATCH INSIDE.

☐ LOCKING - SPRING LOADED SLIDE BOLT ENGAGES SLOT IN TRACK. OPERABLE FROM INSIDE ONLY - MAY BE MOUNTED EITHER SIDE

☐ LOCKING - OMIT LOCK.

LOCKS SHOULD NOT BE SUPPLIED WITH AN ELECTRIC OPERATED DOOR WITHOUT A LOCK INTERLOCK SWITCH.

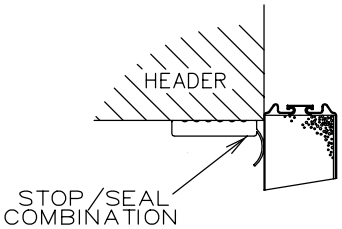

HEADSEAL

☐

DOOR NUMBER	QTY	OPENING		ACTUAL		MODEL	JAMB			MOUNTING		LOCK	PANELS WIDE	PANELS HIGH	SECTION NUMBER OPEN FOR GLASS							
		WIDTH	HEIGHT	WIDTH	HEIGHT		W	S	M	ANGLE	BRKT				1	2	3	4	5	6	7	8

JOB:

DISTR:

CONTR:

ARCH:

RAYNOR

NR:2902505

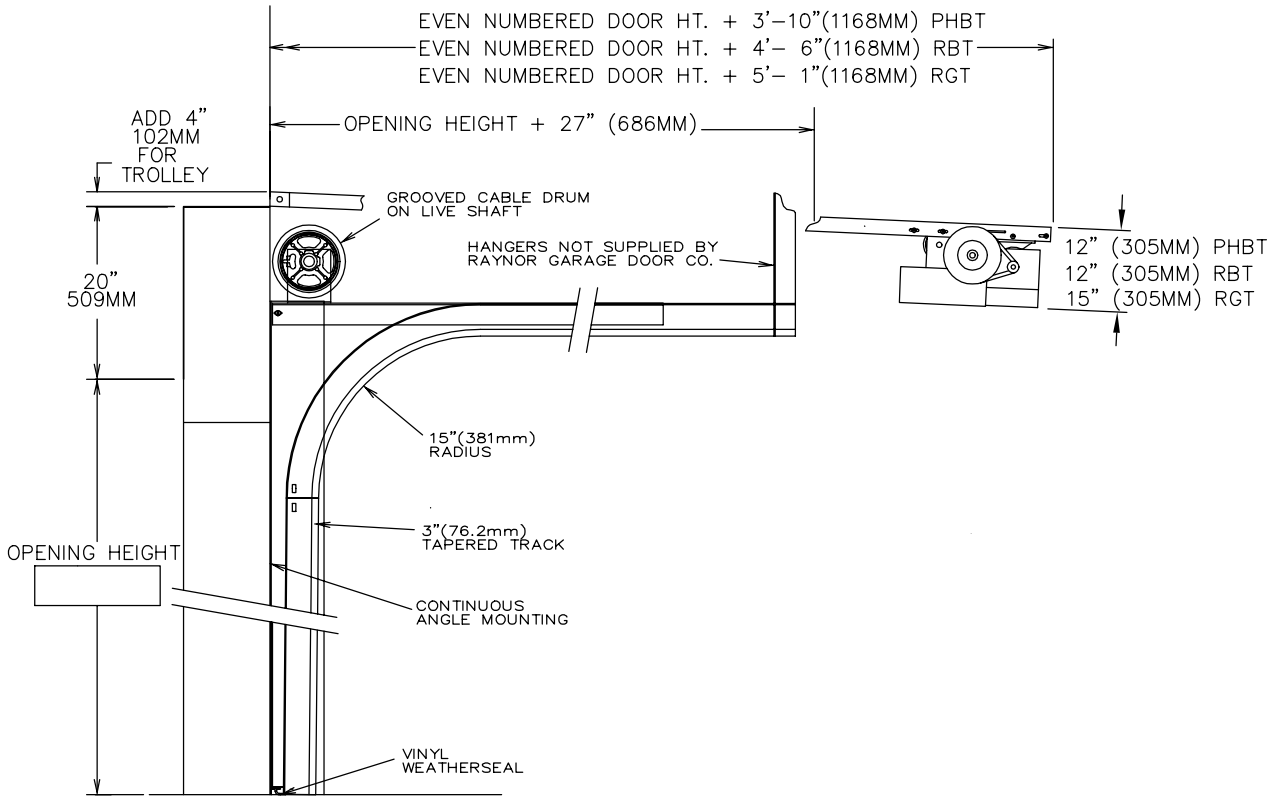

SECTION THRU OPENING

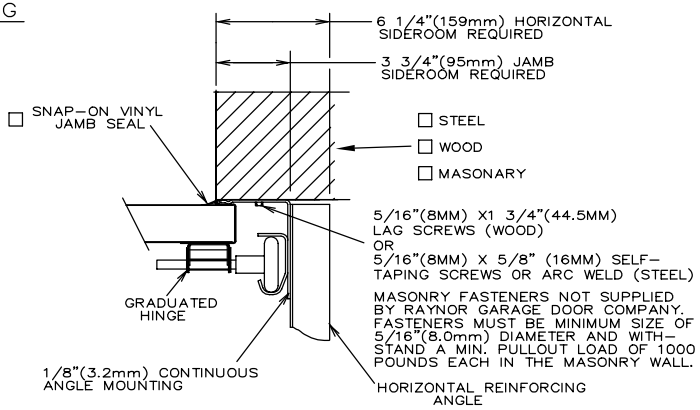

JAMB DETAIL

TRACKS- 3" (76.2mm) HOT-DIPPED GALVANIZED TRACK, PER ASTM A-653, TO BE CONTINUOUS ANGLE MOUNTED, AND FULLY ADJUSTABLE FOR SEALING DOOR TO JAMB. CONTINUOUS ANGLE SIZE TO BE NOT LESS THAN 3-1/2"X6"X1/8" (88.9mmX152mmX3.2mm). HORIZONTAL TRACK TO BE ADEQUATELY REINFORCED WITH CONTINUOUS ANGLE.

HARDWARE- HINGES AND BRACKETS MADE FROM GALVANIZED STEEL. TRACK ROLLERS SHALL HAVE TEN 5/16" (7.9mm) DIAMETER HARDENED STEEL BALLS PER ROLLER.

SPRING COUNTERBALANCE- HEAVY DUTY OIL-TEMPERED WIRE TORSION SPRINGS ON A CONTINUOUS BALL BEARING CROSS-HEADER SHAFT. GALVA-NIZED AIRCRAFT TYPE LIFTING CABLES WITH MIN. SAFETY FACTOR OF 5 TO 1.

ANSI/UL325 REQUIRES THE MOTOR OPERATOR BE MOUNTED A MINIMUM OF 8' ABOVE THE FLOOR OR GUARDING OF THE MOTOR OPERATOR TO PREVENT INJURY.(GUARDS BY OTHERS).

- ☐ RAYNOR POWERHOIST BASIC (PHBT) 1/2 H.P., 115 VOLT, SINGLE PHASE
- ☐ RAYNOR POWERHOIST STANDARD (RBT) ___ H.P., ___ VOLT, ____ PHASE
- ☐ RAYNOR POWERHOIST OPTIMA (RGT) ___ H.P., ___ VOLT, ____ PHASE
- ☐ WIRING TYPE-SR2 WIRING, MOMENTARY CONTACT OPEN/CLOSE/STOP. SAFETY EDGE TO REVERSE.
- ☐ WIRING TYPE-SPECIAL (NOT AVAILABLE WITH PHBT OPERATORS) SPECIFY SPECIAL WIRING TYPE _____
- ☐ PNEUMATIC SAFETY EDGE TO REVERSE
- ☐ ELECTRIC SAFETY EDGE TO REVERSE
- ☐ THRU-BEAM PHOTO EYES

☐ COIL CORD OR ☐ CABLE TAKE UP REEL