DOOR NUMBER	QTY	OPENING		ACTUAL		MODEL	JAMB			MOUNTING		LOCK	PANELS WIDE	PANELS HIGH	SECTION NUMBER OPEN FOR GLASS							
		WIDTH	HEIGHT	WIDTH	HEIGHT		W	S	M	ANGLE	BRKT				1	2	3	4	5	6	7	8

JOB:

DISTR:

CONTR:

ARCH:

RAYNOR

NR: 2904063

STYLEFORM BASIC

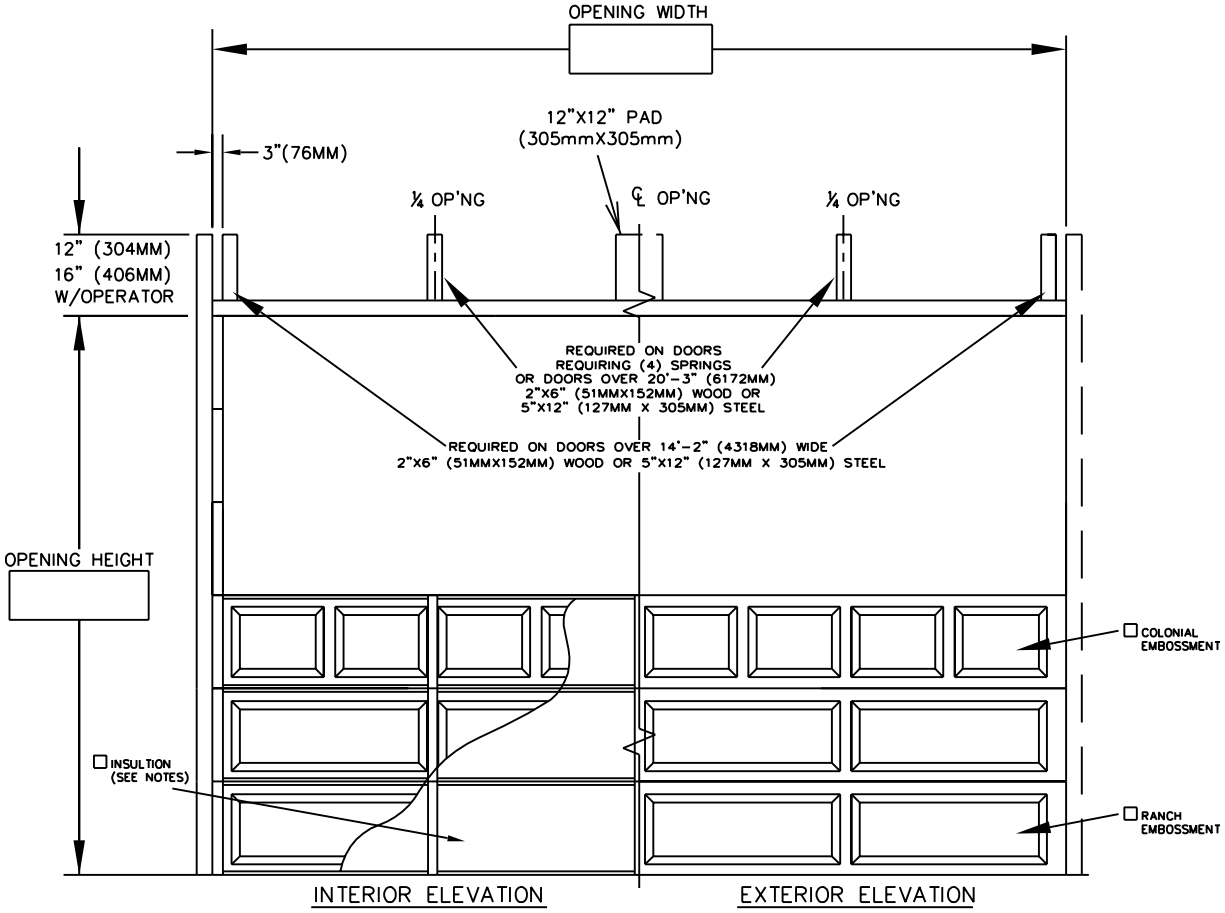

1) DOOR SHALL BE RAYNOR SECTIONAL OVERHEAD TYPE STYLEFORM BASIC (CLASSIC) AS PRODUCED BY RAYNOR MANUFACTURING COMPANY. SECTIONS-SECTIONS SHALL BE 2" THICK, ROLL FORMED COMMERCIAL QUALITY, HOT DIP GALVANIZED, 26 GAUGE(.022" MIN.) STEEL PER ASTM A-924 AND A-653. EACH SECTION TO HAVE STUCCO EMBOSSED RAISED PANEL DESIGN WITH TONGUE AND GROOVE JOINT FOR WEATHERTIGHT CLOSURE BETWEEN SECTIONS. END STILES AND CENTER STILES TO BE .8 GA.(.043" MIN.) STEEL RIVETED TO THE EXTERIOR FACE WITH COUNTERSUNK STAINLESS STEEL RIVETS AND RESISTANCE WELDED TO INTERIOR RAIL.

FINISH-PRIOR TO ROLL-FORMING, EXTERIOR OF DOOR TO BE PRECOATED WITH TWO-COAT PROCESS OF BAKED ON POLYESTER FINISH_____ (WHITE, ALMOND, BROWN, OR CLAYTONE) OVER EPOXY PRIMER INTERIOR TO HAVE A COAT OF EPOXY PRIMER WITH BAKED ON FINISH COAT OF GREY ALKYD ENAMEL.

RABBET BETWEEN SECTIONS-ROLL-FORMED TOUNGE AND GROVE WEATHER JOINT

☐ INSULATION- SECTIONS ARE INSULATED WITH 1 3/8" (34.9mm) THICK RIGID EXPANDED POLYSTYRENE INSULATION. MEETS UL723 (ASTME-84) WITH A MAXIMUM FLAME SPREAD OF .25. INSULATION FACED WITH 0.015" (0.38mm) WHITE HAIRCELL TEXTURED HIGH-IMPACT POLYSTYRENE. R-VALUE= 7.70AND U-VALUE= 0.130. (COVERS NOT REQUIRED)

☐ GLAZED SECTIONS- SECTIONS SHALL BE RAYNOR SERIES "HL" MADE FROM 6063T6 EXTRUDED ALUMINUM STILE AND RAIL CONSTRUCTION. GLASS ENCASED IN SOFT VINYL CHANNELS AND HELD IN PLACE WITH SNAP-IN EXTRUDED ALUMINUM RETAINER.
FINISH- SECTIONS TO BE ENDURA COATED TO MATCH DOOR SECTIONS FULL VIEW GLAZING (AS SHOWN)- _____ (DSB OR DSBT)

☐ GLAZING (AS SHOWN)- 24"(610MM)X8"(203MM)X ____ (1/8", 1/4", 5/8") RUBBER BY RAYNOR.

☐ LOCKING - CREMONE TYPE BOLT ENGAGES SLOT IN TRACK, _____ HAND SIDE. FIVE PIN TUMBLER CYLINDER OUTSIDE - NIGHT LATCH INSIDE.

☐ LOCKING - SPRING LOADED SLIDE BOLT ENGAGES SLOT IN TRACK. OPERABLE FROM INSIDE ONLY - MAY BE MOUNTED EITHER SIDE

☐ LOCKING - OMIT LOCK.

LOCKS SHOULD NOT BE SUPPLIED WITH AN ELECTRIC OPERATED DOOR WITHOUT A LOCK INTERLOCK SWITCH.

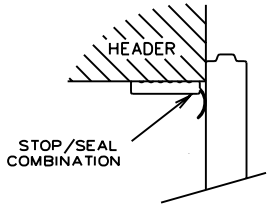

HEADSEAL

☐

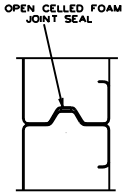

SECTION JOINT SEAL
(FIELD APPLIED)

☐

DOOR NUMBER	QTY	OPENING		ACTUAL		MODEL	JAMB			MOUNTING		LOCK	PANELS WIDE	PANELS HIGH	SECTION NUMBER OPEN FOR GLASS							
		WIDTH	HEIGHT	WIDTH	HEIGHT		W	S	M	ANGLE	BRKT				1	2	3	4	5	6	7	8

JOB:

DISTR:

CONTR:

ARCH:

RAYNOR

NR:2904063

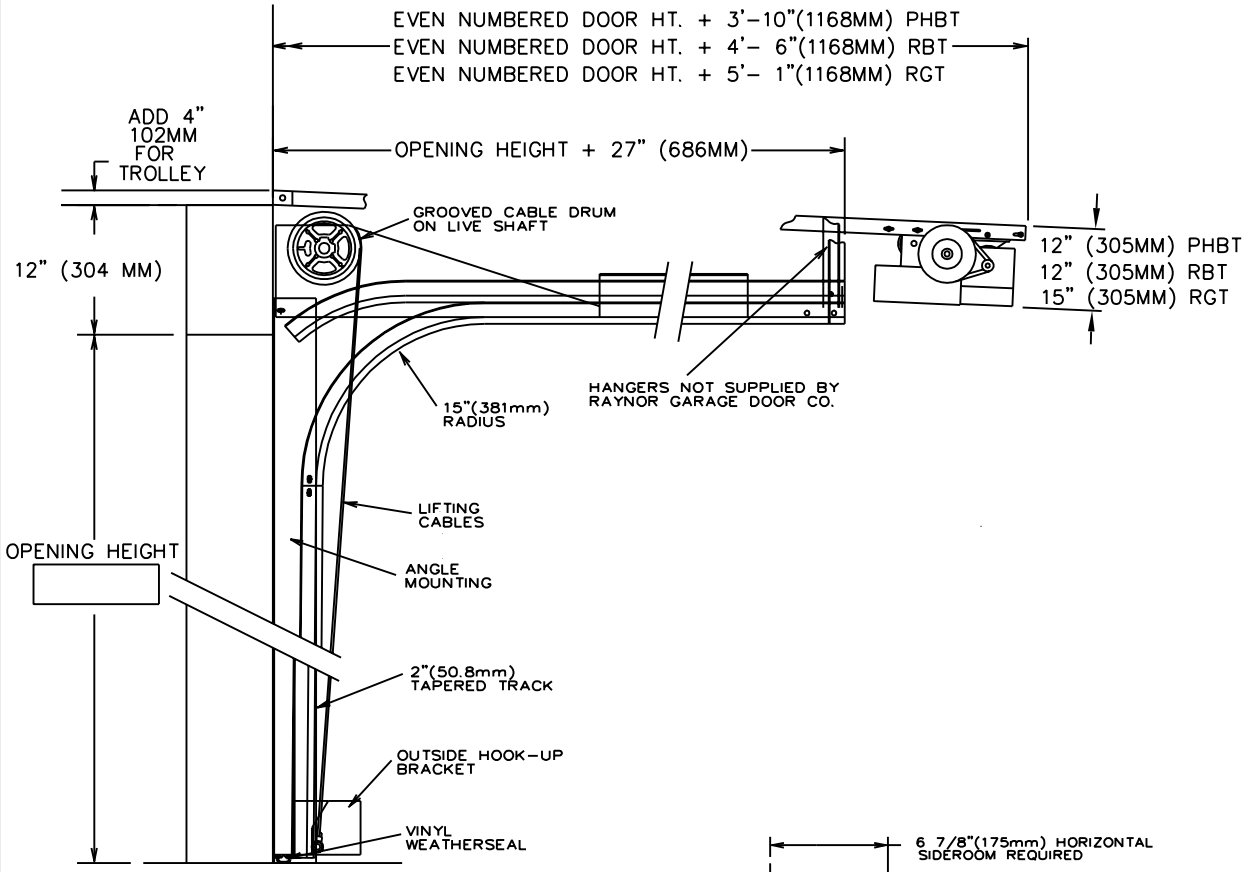

SECTION THRU OPENING

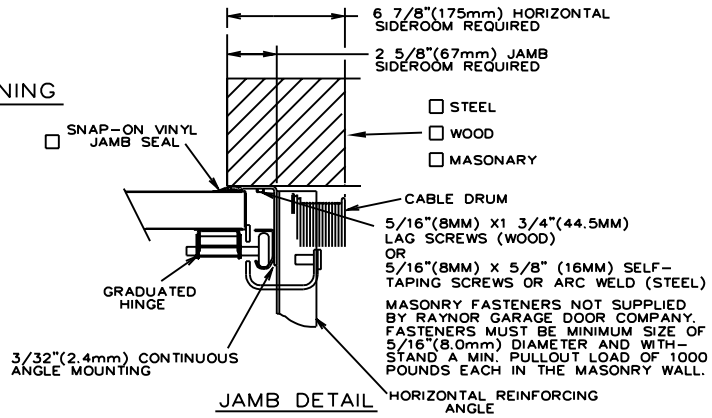

JAMB DETAIL

TRACKS- 2" (50.8mm) HOT-DIPPED GALVANIZED TRACK, PER ASTM A-653, TO BE BRACKET MOUNTED AND FULLY ADJUSTABLE FOR SEALING DOOR TO JAMB. HORIZONTAL TRACK TO BE ADEQUETLY REINFORCED WITH CONTINUOUS ANGLE.

HARDWARE- HINGES AND BRACKETS MADE FROM GALVANIZED STEEL. TRACK ROLLERS SHALL HAVE TEN 1/4" (6.4mm) DIAMETER HARDENED STEEL BALLS PER ROLLER.

SPRING COUNTERBALANCE- HEAVY DUTY OIL-TEMPERED WIRE TORSION SPRINGS ON A CONTINUOUS BALL BEARING CROSS-HEADER SHAFT. GALVANIZED AIRCRAFT TYPE LIFTING CABLES WITH MIN. SAFETY FACTOR OF 5 TO 1.

ANSI/UL325 REQUIRES THE MOTOR OPERATOR BE MOUNTED A MINIMUM OF 8' ABOVE THE FLOOR OR GUARDING OF THE MOTOR OPERATOR TO PREVENT INJURY.(GUARDS BY OTHERS).

- ☐ RAYNOR POWERHOIST BASIC (PHBT) 1/2 H.P., 115 VOLT, SINGLE PHASE
- ☐ RAYNOR POWERHOIST STANDARD (RBT) ___ H.P., ___ VOLT, ____ PHASE
- ☐ RAYNOR POWERHOIST OPTIMA (RGT) ___ H.P., ___ VOLT, ____ PHASE
- ☐ WIRING TYPE-SR2 WIRING, MOMENTARY CONTACT OPEN/CLOSE/STOP. SAFETY EDGE TO REVERSE.
- ☐ WIRING TYPE-SPECIAL (NOT AVAILABLE WITH PHBT OPERATORS) SPECIFY SPECIAL WIRING TYPE _____
- ☐ PNEUMATIC SAFETY EDGE TO REVERSE
- ☐ ELECTRIC SAFETY EDGE TO REVERSE
- ☐ THRU-BEAM PHOTO EYES

☐ COIL CORD OR ☐ CABLE TAKE UP REEL