DOOR NUMBER	QTY	OPENING		ACTUAL		MODEL	JAMB			MOUNTING		LOCK	PANELS WIDE	PANELS HIGH	SECTION NUMBER OPEN FOR GLASS							
		WIDTH	HEIGHT	WIDTH	HEIGHT		W	S	M	ANGLE	BRKT				1	2	3	4	5	6	7	8

JOB:

DISTR:

CONTR:

ARCH:

RAYNOR

NR:2904140

DESIGNFORM OPTIMA

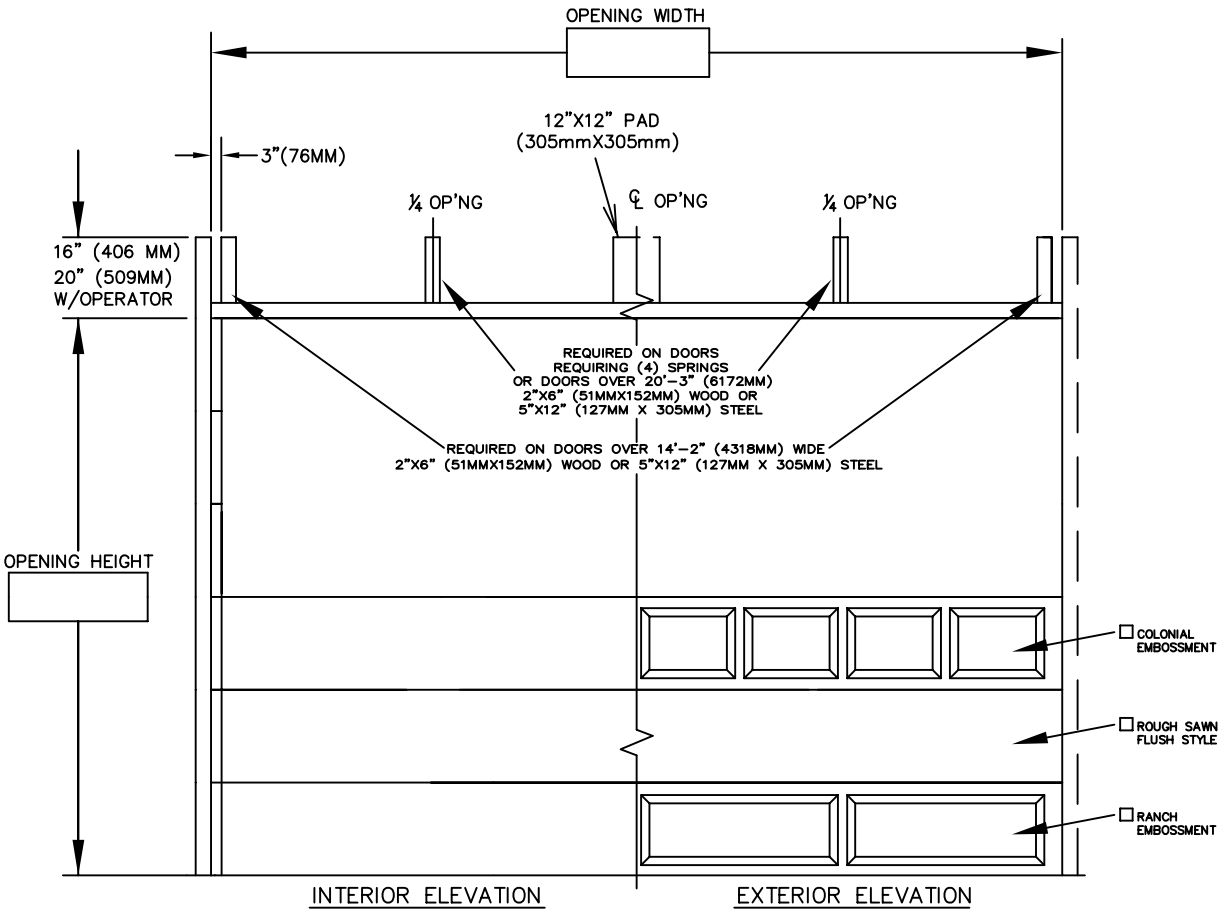

1) DOORS SHALL BE DESIGNFORM OPTIMA SECTIONAL OVERHEAD TYPE DOOR AS PROVIDED BY RAYNOR GARAGE DOORS. SECTIONS SHALL BE 2" THICK, ROLL-FORMED FROM COMMERCIAL QUALITY HOT DIPPED GALVANIZED STEEL PER ASTM A-924 AND A-653. DOOR CONSTRUCTED OF 24 GAUGE HOT DIPPED GALVANIZED (G60) STEEL. SECTIONS TO HAVE 20 GA. HORIZONTAL HINGE REINFORCEMENT PLATES LOCATED WITHIN THE SECTION INTERIOR. END STILES SHALL BE 18 GA. (.086") GALVANIZED STEEL PER ASTM A-925 AND A-653 WITH WHITE, POWDER-COATED FINISH. SECTIONS SHALL FEATURE A PINCH-RESISTANT, TOUNGE-AND-GROOVE JOINT FOR WEATHER-TIGHT CLOSURE BETWEEN SECTIONS.

POLYURETHANE INSULATION APPLIED WITH A FOAM IN PLACE TECHNIQUE FOR INCREASED RIGIDITY AND INSULATING VALUE. AS PER ASTM C-518 THE R-VALUE = 18.0 AND HAS A U-VALUE OF .05

SECTION FINISH – EXTERIOR/INTERIOR OF DOOR SKINS ARE TO BE PRE-COATED PRIOR TO ROLL-FORMING WITH A TWO COAT PROCESS OF BAKED ON POLYESTER FINISH OVER EPOXY PRIMER.

☐ LOCKING – CREMONE TYPE BOLT ENGAGES SLOT IN TRACK, _____ HAND SIDE. FIVE PIN TUMBLER CYLINDER OUTSIDE – NIGHT LATCH INSIDE.

☐ LOCKING – SPRING LOADED SLIDE BOLT ENGAGES SLOT IN TRACK. OPERABLE FROM INSIDE ONLY – MAY BE MOUNTED EITHER SIDE

☐ LOCKING – OMIT LOCK.

LOCKS SHOULD NOT BE SUPPLIED WITH AN ELECTRIC OPERATED DOOR WITHOUT A LOCK INTERLOCK SWITCH.

MIXED PANELS

☐ MILLCREEK	☐ BROOKVIEW
☐ BRIDGEPORT	☐ RIVERSIDE
☐ SHORELAND	☐ SPRINGFIELD
☐ RIDGELAKE	☐ BAYPOINT
☐ EDGEWATER	☐ HIGHCREST

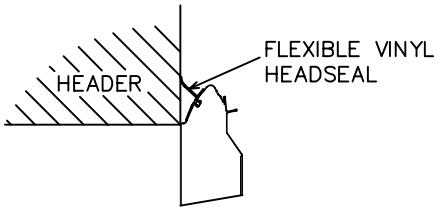

HEADSEAL

☐

DOOR NUMBER	QTY	OPENING		ACTUAL		MODEL	JAMB			MOUNTING		LOCK	PANELS WIDE	PANELS HIGH	SECTION NUMBER OPEN FOR GLASS							
		WIDTH	HEIGHT	WIDTH	HEIGHT		W	S	M	ANGLE	BRKT				1	2	3	4	5	6	7	8

JOB:

DISTR:

CONTR:

ARCH:

RAYNOR

NR:2904140

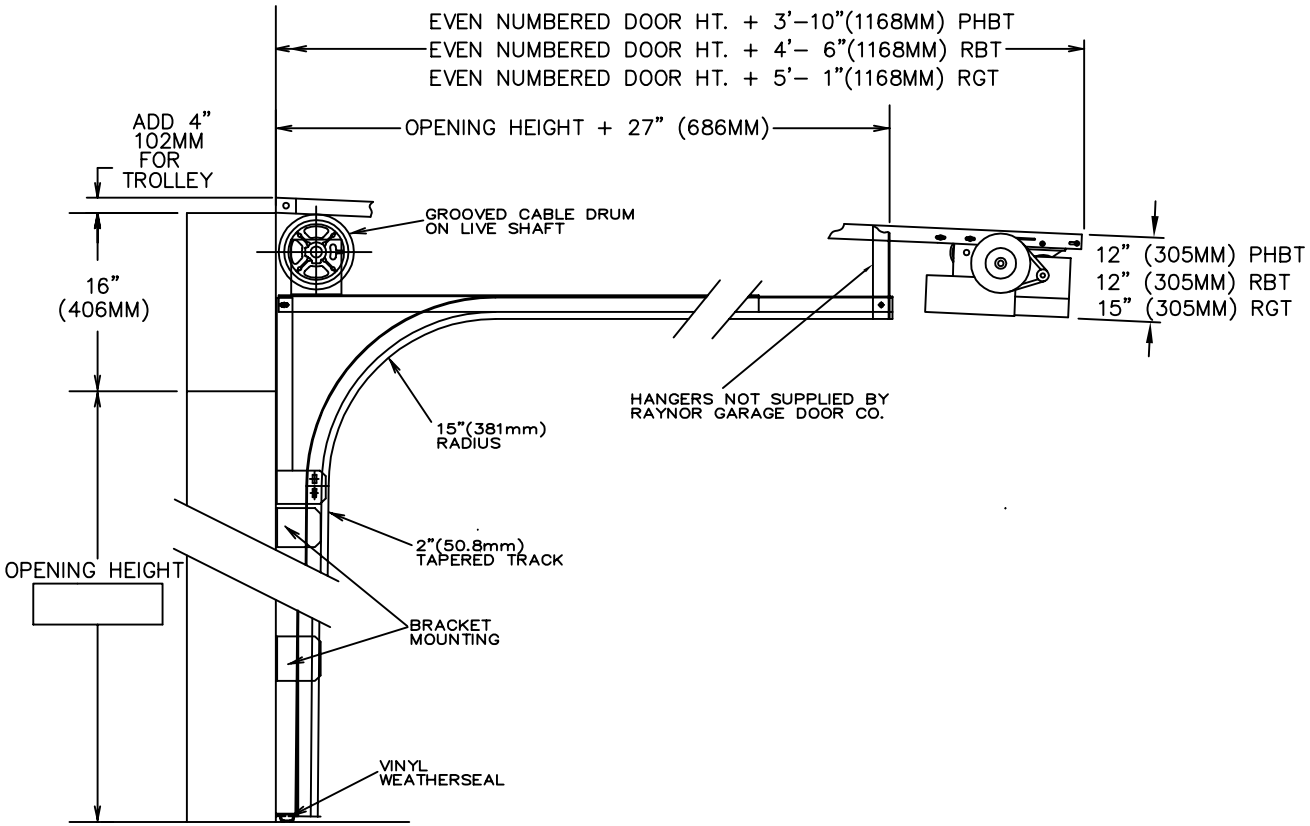

SECTION THRU OPENING

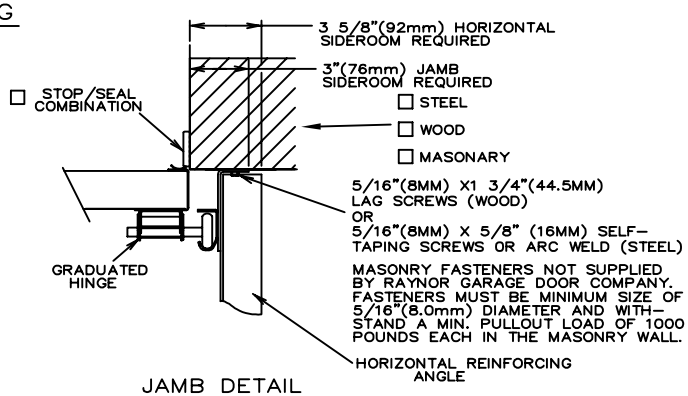

JAMB DETAIL

TRACKS– 2" (50.8mm) HOT–DIPPED GALVANIZED TRACK, PER ASTM A–653, TO BE BRACKET MOUNTED AND FULLY ADJUSTABLE FOR SEALING DOOR TO JAMB. HORIZONTAL TRACK TO BE ADEQUETLY REINFORCED WITH CONTINUOUS ANGLE.

HARDWARE– HINGES AND BRACKETS MADE FROM GALVANIZED STEEL. TRACK ROLLERS SHALL HAVE TEN 1/4" (6.4mm) DIAMETER HARDENED STEEL BALLS PER ROLLER.

SPRING COUNTERBALANCE– HEAVY DUTY OIL–TEMPERED WIRE TORSION SPRINGS ON A CONTINUOUS BALL BEARING CROSS–HEADER SHAFT. GALVA–NIZED AIRCRAFT TYPE LIFTING CABLES WITH MIN. SAFETY FACTOR OF 5 TO 1.

ANSI/UL325 REQUIRES THE MOTOR OPERATOR BE MOUNTED A MINIMUM OF 8' ABOVE THE FLOOR OR GUARDING OF THE MOTOR OPERATOR TO PREVENT INJURY.(GUARDS BY OTHERS).

- ☐ RAYNOR POWERHOIST BASIC (PHBT) 1/2 H.P., 115 VOLT, SINGLE PHASE
- ☐ RAYNOR POWERHOIST STANDARD (RBT) ___ H.P., ___ VOLT, ____ PHASE
- ☐ RAYNOR POWERHOIST OPTIMA (RGT) ___ H.P., ___ VOLT, ____ PHASE
- ☐ WIRING TYPE–SR2 WIRING, MOMENTARY CONTACT OPEN/CLOSE/STOP. SAFETY EDGE TO REVERSE.
- ☐ WIRING TYPE–SPECIAL (NOT AVAILABLE WITH PHBT OPERATORS) SPECIFY SPECIAL WIRING TYPE _____
- ☐ PNEUMATIC SAFETY EDGE TO REVERSE
- ☐ ELECTRIC SAFETY EDGE TO REVERSE
- ☐ THRU–BEAM PHOTO EYES

☐ COIL CORD OR ☐ CABLE TAKE UP REEL